Columbia Taping Tools

Automatic Taper Head Assembly

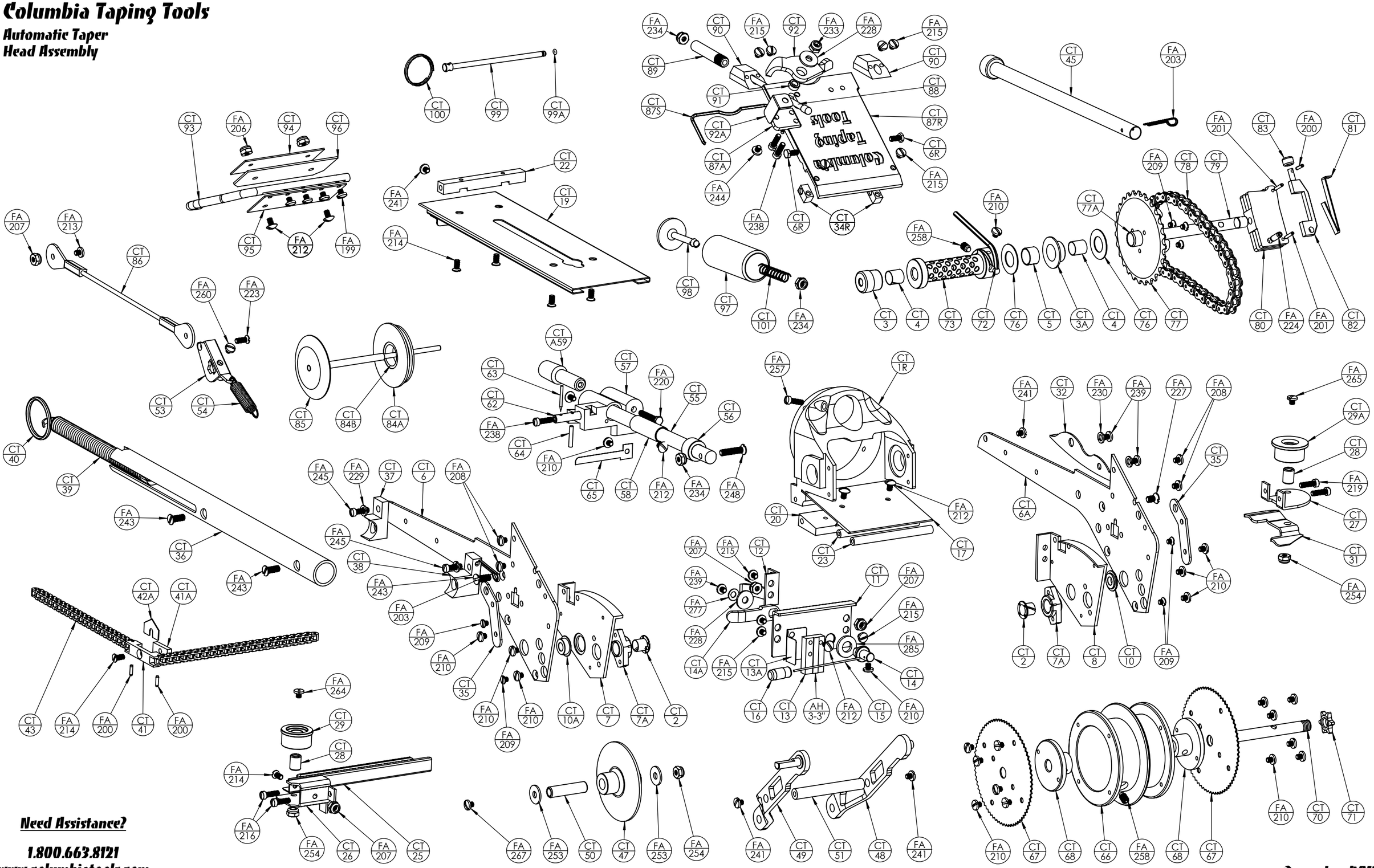

Need Assistance?

1.800.663.8121
www.columbiatools.com

December 2015